isenberg
innovation+design

ECOMATIC™
Made For Responsible Luxury

Serie 145™

145.2420 | 5-Hole Deck Mounted Roman Tub Filler With Hand Held Shower

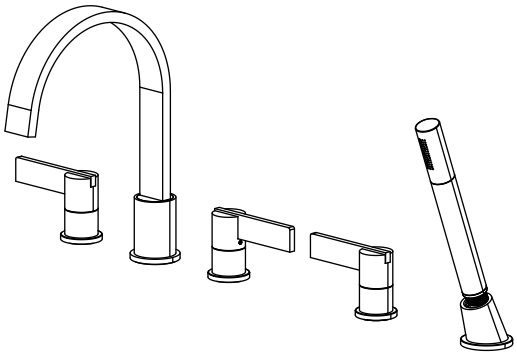

SPECIFICATIONS:

- Solid Brass construction - includes valves DKM.2420
- Five Hole Installation
- Flow Rate = 7.0 GPM @ 60 PSI
- Hand Shower Flow Rate = 1.8 GPM @ 60 PSI w/ back flow prevention
- Diverter handle controls water flow between spout and hand held

STANDARDS:

- ASME A112.18.1 / CSA B125.1

Legislation Compliance

ZeroDrip Technology

Technical Diagram

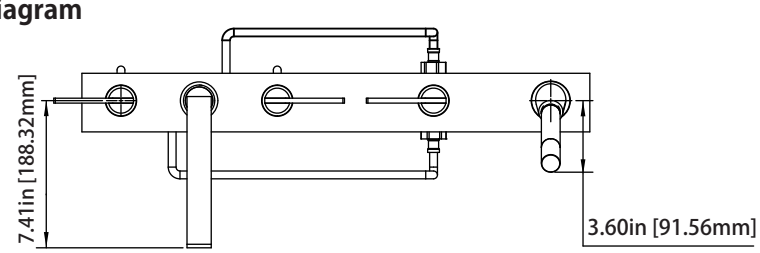

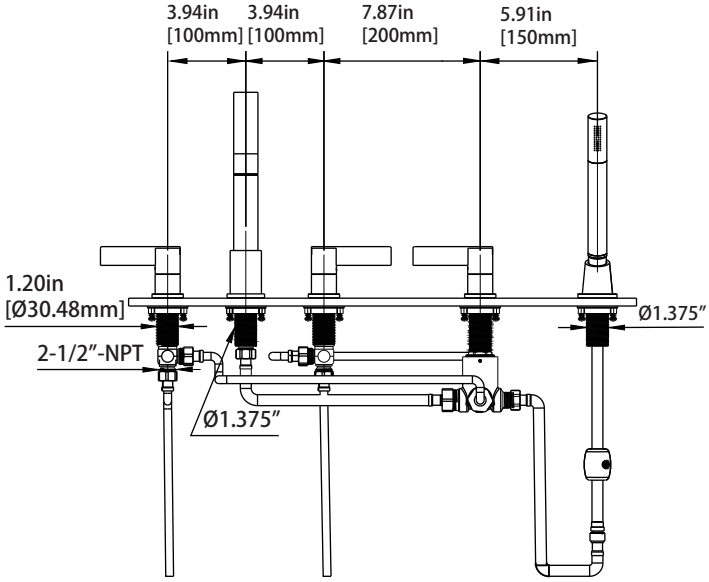

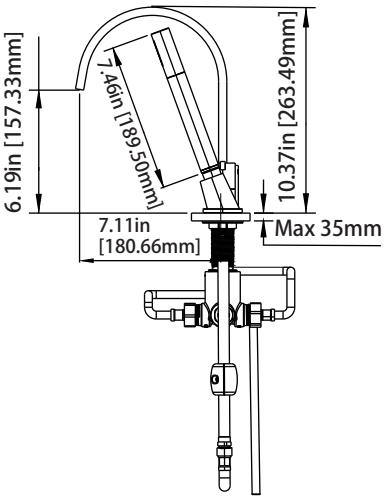

Critical Dimensions in Inches [mm]