LS8210,1,5,8DKL
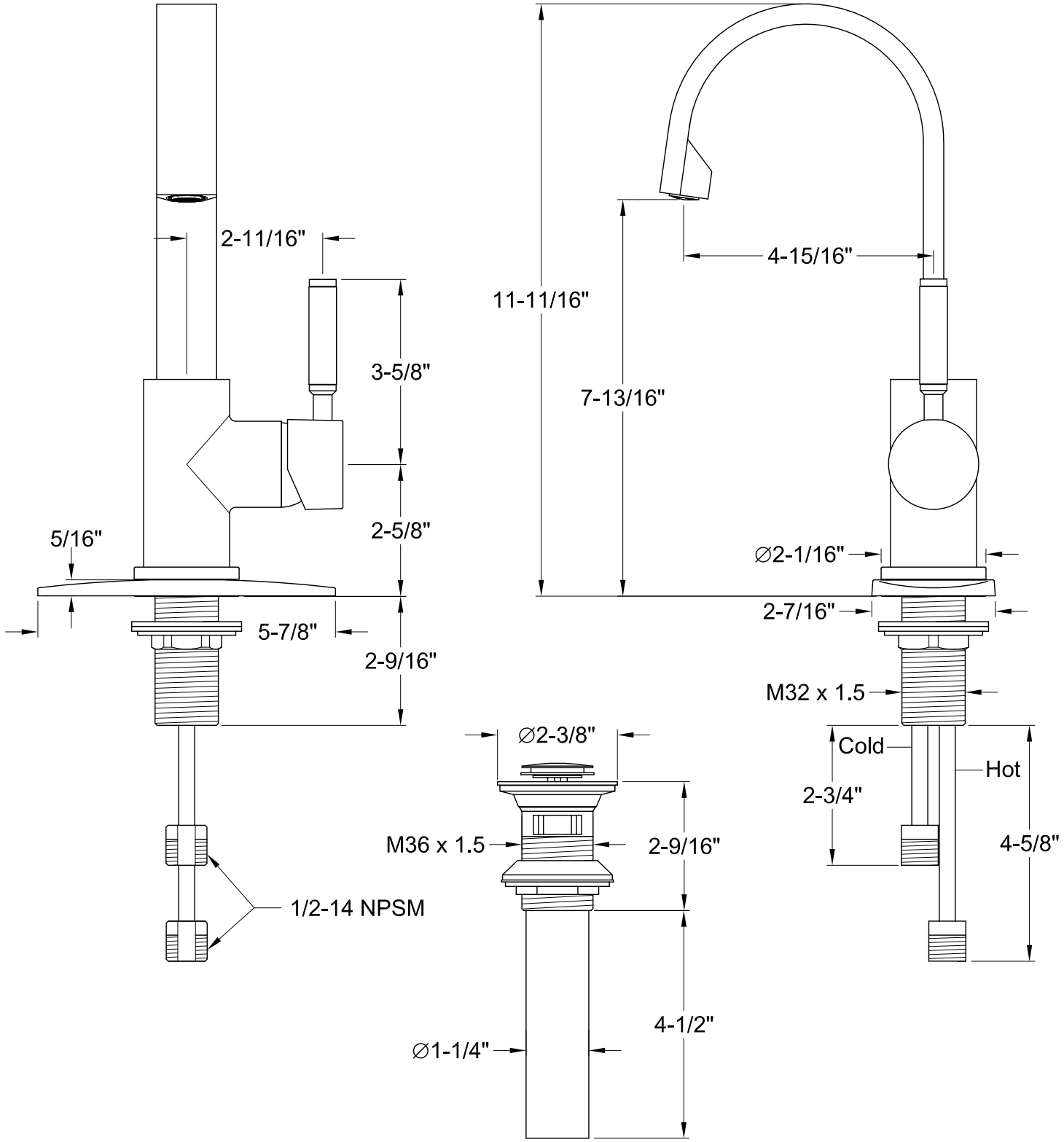
Single Handle Lavatory Faucet With Push-Up Pop-Up