KB601,2,4,5,7,8,9BL
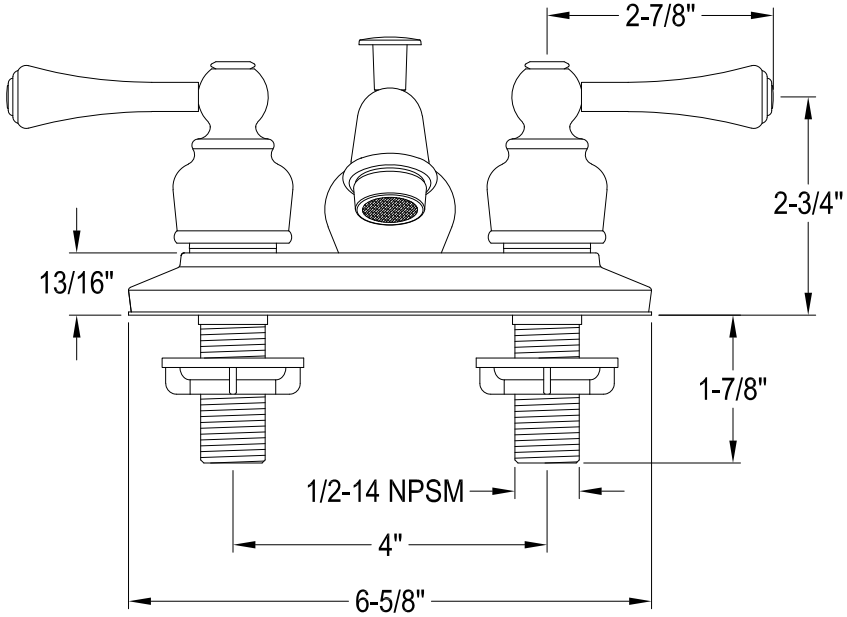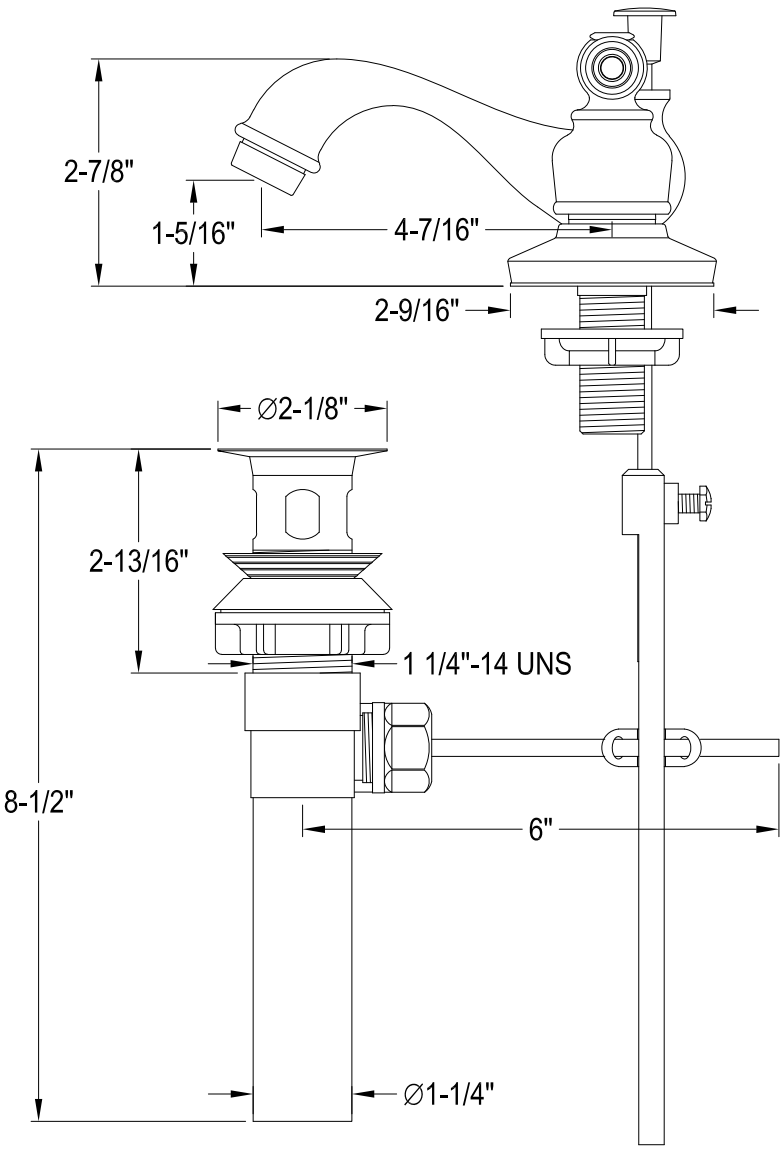
Twin Handles 4" Centerset Lavatory Faucet With Retail Pop-Up