GKB911,2,5,8BL
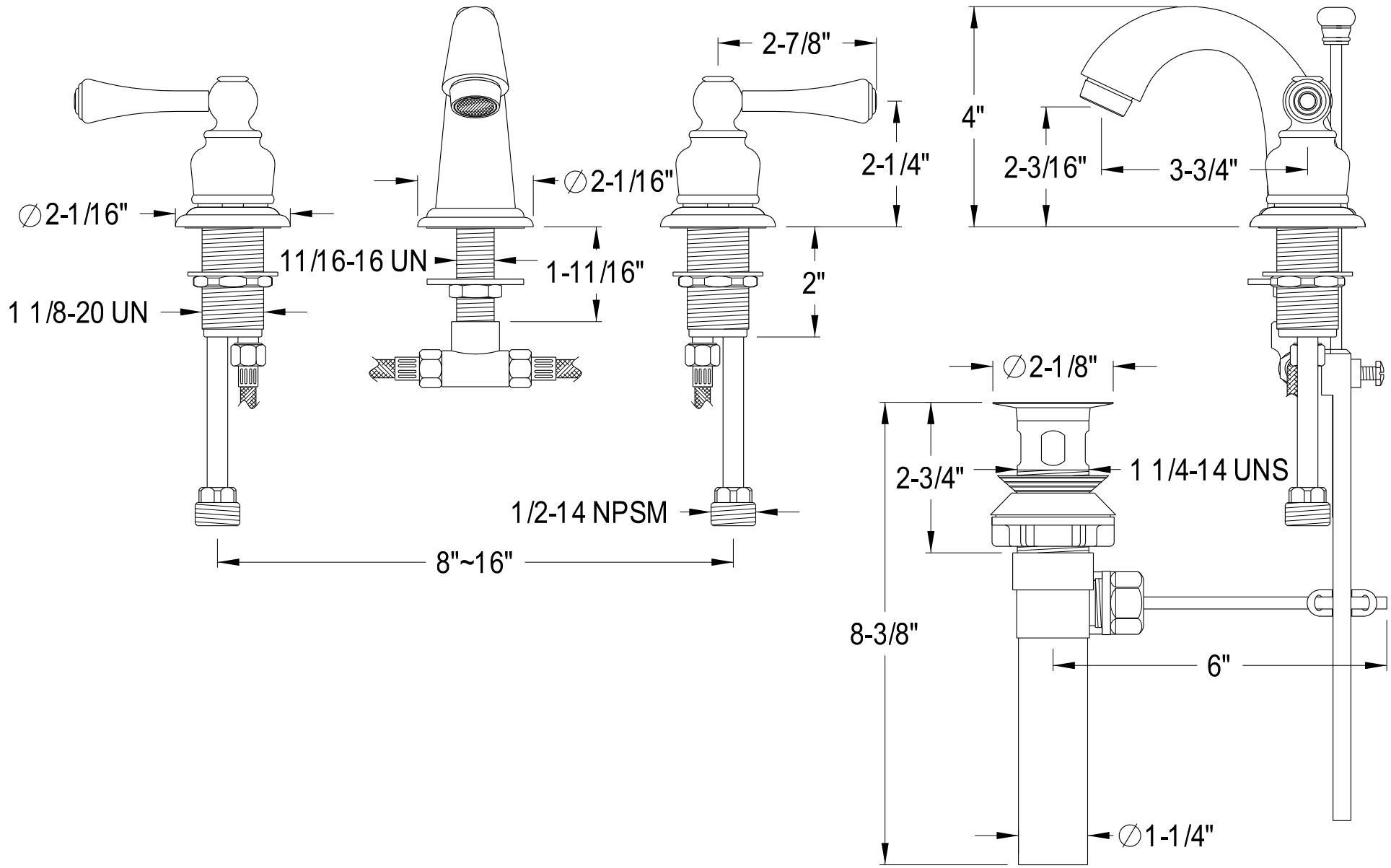
Widespread Lavatory Faucet With Retail Pop-Up