LACAVA®

Aquaquattro Vanity
Item #5214C

Features:
-Free standing undercounter wood vanity
-Three doors with finger pull opening
-Three drawers with K470-CR hardware
-Soft close drawer slides and concealed European hinges
-Washbasin sold separately
-Handmade in USA
-Manufactured with low VOC finishes and wood from renewable forests

Recommended Accessories:
-Item #5214: Vanity top porcelain double-bowl sink with overflow
 -Finish options: White (-001)
 -Faucet hole options available: None, One, Two, or Three in 8" spread
-Item #5215: Vanity top porcelain single wide bowl sink with overflow
 -Finish options: White (-001)
 -Faucet hole options available: None, One, Two, or Three in 8" spread

Finish Options:

02 - Natural Cherry
06 - Wenge
07 - Natural Walnut
08 - Matte White (TEX1 - fine texture)
16 - Matte Black (TEX1 - fine texture)
18 - Ebony
20 - Ash Gray
22 - Gray Zebra
24 - Classic Walnut
31 - White Oak
33 - African Mahogany
34 - Matte Mocha (TEX1 - fine texture)
35 - Matte Ardesia (TEX1 - fine texture)
36 - Espresso
37 - Weathered Oak
52 - Silver Oak
85 - Gloss White
86 - Gloss Black
87 - Gloss Mocha
88 - Gloss Ardesia

Product Specifications:

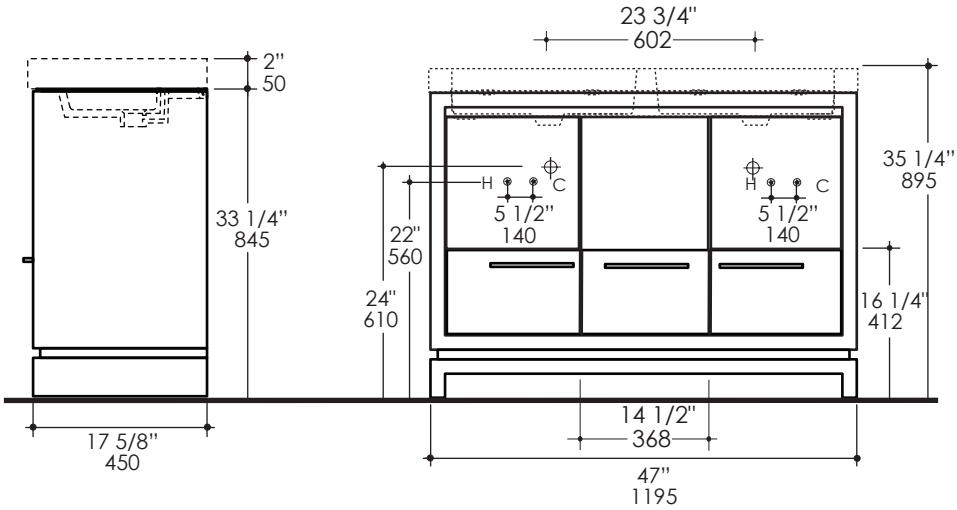

Notes:
Drawings provided herein are meant to give the user an idea of the product and are not made to scale. The size in inches is rounded up to the nearest 1/16". Slight variances can often occur with porcelain and woodwork. Therefore, LACAVA will not be held responsible for any cutouts, countertops, or furniture made without the actual product or template from LACAVA. Differences in color, grain, appearance and texture are inherent in all natural woodwork, and should be expected. Variances in these qualities are not deemed manufacturing defects, and will not be accepted as valid reasons to return or exchange any LACAVA woodwork. Plumbing specifications are only a guideline and may need to be altered based on the application.
Product specifications are not binding to the manufacturer and can be changed without notice at any time. Please refer to your shipment for product final sizes.

LACAVA is committed to the highest level of customer service. Please feel free to contact us at 1-888-522-2823 (toll free) or by email at info@lacava.com for technical assistance or any general inquiries.

Rev. 05-26-2017

6630 west wrightwood ave chicago il 60707 usa tel 773 637 9600 fax 773 637 9601 info@lacava.com www.lacava.com