TEAR SHEET

Overture Medium Ring Chandelier

Item # PB 5030PN-CG

Designer: Peter Bristol

O/A Height: 69.25"
Fixture Height: 24.75"
Min. Custom Height: 17.25"
Width: 28.75"
Canopy: 6" Round
Finishes: BZ, NB, PN
Glass Options: CG
Socket: Dedicated LED
Wattage: 35w (2500lm)
Note: UL Only | Custom Height Available | Fixture Can be Installed Inverted

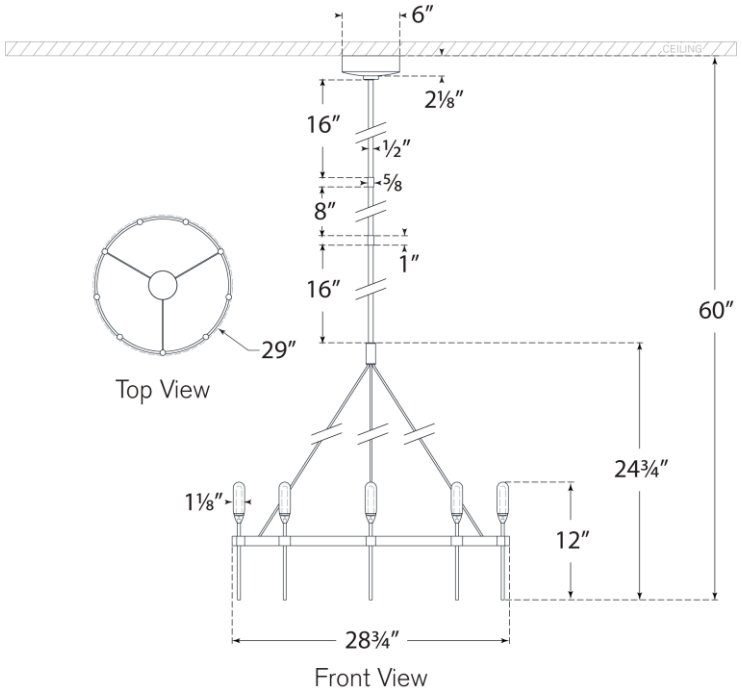

VISUAL COMFORT