TEAR SHEET

Ilona Medium Table Lamp
Item # RL 3677BLK-L

Designer: Ralph Lauren

Height: 24.5"
Width: 18"
Base: 7" Square
Finishes: BLK, WHT
Shade Treatments: L
Shade Details: 14.5" x 18" x 12"
Socket: E26 Dimmer
Wattage: 100 A19
Weight: 18 Pounds

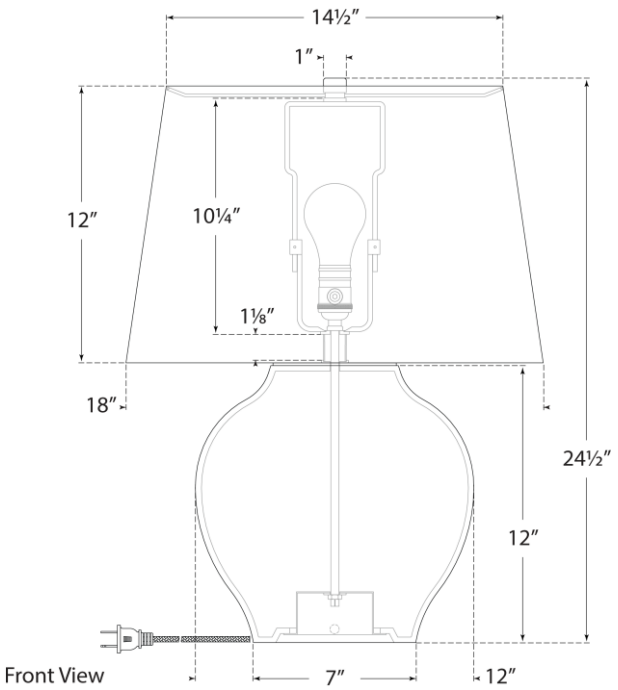

VISUAL COMFORT